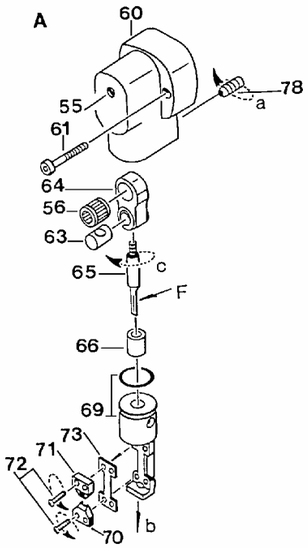

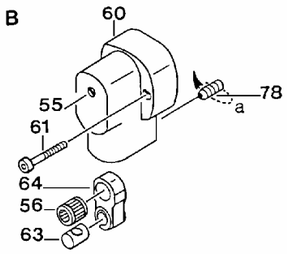

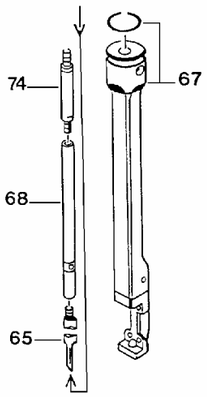

2. Operation

2.1 What should be remembered when starting work?

a) Turn eccentric shaft (55) with screw driver.
b) Check if dipping depth of punch is all right (see point 3.2, i).

3. Maintenance

3.1 What points should be noted when operating the profile nibbler?

a) Always lubricate line of cut with of cut with oil in case of steel sheet and with kerosene in case of aluminium sheet. If punching and nibbling oil (ordering No. 20198) is used, the punch life can be increased when nibbling steel sheet.
b) Check whether punch and die are sharp. Die must also be sharp on its face where it supports the sheet.
Never nibble with blunt tools!
c) The nibbler works more smoothly if it is slightly lifted during operation.

3.2 What should be done when the punch is blunt? A

a) Undo set screw (78) approximately 4 turns.
b) Withdraw tool head from housing.
c) PN 4360 unscrew punch (65) from connecting rod pin (63).
PN 4361 unscrew punch (65) with its lower extension (68) from upper extension (74).
d) Regrind face of punch (65) and bevel at the rear at longitudinal groove.
e) Be careful that punch does not become shorter than the min. length (61 mm=2.44 in). Shorter punches are unserviceable.
f) Dress cutting edge slightly with oil stone.
g) PN 4360 Screw punch into connecting rod pin.
PN 4361 Screw punch with its lower extension into upper extension.
h) Slide tool head into housing (dismantle punch guide). Centre and secure with set screw (78).
i) Turn eccentric shaft (55) with screw driver. At the same time check dipping depth of punch. Punch should dip approx. 1,0 mm (.02 to .04) into die.
k) Retighten set screw after a short nibbling distance (78).

PN 4361 **B**

When changing the punch, take care that punch (65) is firmly screwed into punch extension (68). The same applies to fastening of punch extension (74) in connecting rod pin (63). Screw in firmly punch extension (74) by means of an 8 mm fork wrench. See fig. page B.
The fine-pitch thread between the two extensions (68,74) may only be screwed in loosely. Here the depth of penetration of the punch can be adjusted (compare. 3.2,i).

3.3 What should be done when die is blunt? A+B

a) Undo screws (72).
b) Exchange old die for new one.
c) Check if air gap between punch and die is equal on both sides.
d) Tighten screws.

3.4 What must be done if air gap is not uniform? A+B

a) Undo screws (72).
b) Align die (70) according to punch (65) so that air gap between punch and die is equal on both sides.
c) Screw on die and check air gap.

3.5 How the wearing plate is to be changed? A+B

a) Unscrew die (70) and punch guide (71).
b) Turn punch (65) to top dead centre.
c) Take out wearing plate sideways.
d) Insert new wearing plate (73).
e) Turn punch to bottom dead centre.
f) Fasten die and punch guide with screw, check air gap (see point 3.4) and tighten screw.

Please note: Electric tools correspond to the governing safety regulations. Repair work may only be performed by electrical engineers. Otherwise the operator may suffer injury. Use original spare parts only.

Max Draenert GmbH & Co.KG Electric - Cordless - Pneumatic Tools - Machines **Germany**

Factory : **Administration** D-73777 Deizisau P.O.Box 1120 Phone **+49-7153-8217-0**
Manufacturing Shears D-73779 Deizisau Gutenbergstreet 15-17 Fax **+49-7153-8217-66**
Internet: **http://www.dracotools.com** E-mail: **draenert@dracotools.com**

PN 4361 PN 4360

Operating Instructions for Profile Nibbler

To avoid any disturbance please read the following instructions:

For your safety:

1 Safe operation of this machine is possible only when the operating instructions and the safety precautions are read completely and the instructions contained therein are strictly observed.

2 The machine must not be used when damp and must not be operated in a wet environment.

3 Always inspect cable and plug before using machine. Only have damage repaired by a qualified professional. Put the plug into the mains socket only when the machine is switched off.

4+5 Always wears protective goggles, protective gloves and heavy-duty shoes when working.

I Do not carry the machine by the cable.
I Always remove the plug from the power supply socket before carrying out any work on the machine, when interrupting work and when not using the machine.
I Always place the cable to the rear away from the machine.
I Apply the machine to the sheet metal only when switched on.
I Always provide for secure footing when working.
I Firmly clamp the work piece if it dose not remain stationary from its own weight.
I The knife should not rub on the jaws: Possible danger of cutting tool breakage.
I Do not exceed the maximum allowable material thickness especially when cutting over doublers, folded joints or welded seams.

F **For further notes on safety refer to enclosed sheet**

Technical Data:

DRÄCO Profile Nibblers		**type**	**PN 4361**	**PN 4360**
max. cutting capacity				
steel	400 N/mm²	mm/ga.	**1,6 / 16**	**2,0 / 14**
stainless steel	600 N/mm²	mm/ga.	**1,0 / 19**	**1,2 / 18**
stainless steel	800 N/mm²	mm/ga.	**0,7 / 21**	**1,0 / 19**
non ferro	250 N/mm²	mm/ga.	**2,5 / 12**	**2,5 / 12**
depth of profiles max.		mm/ "	**162 / 6½**	**79 / 3**
tightest radius		mm/ "	**50 / 2**	**70 / 2¾**
starting hole		mm/ "	**24 / 1**	**24 / 1**
working speed		m/min	**2**	**2**
strokes		min $^{-1}$	**0-1400**	**0-1400**
motor capacity		Watts	**500**	**500**
weight		kg	**2,0**	**1,8**

PN 4361 & PN 4360	
spare parts	
punch	41576
die	41577
wear plate	41579
screw (Torx)	41022
optional accessories	
transport-box for PN 4361	42861
metal-box for PN 4360	18000
nibbling oil (bottle 1,0L)	20198
nibbling oil (spray 0,5L)	20199

KD, 16-3-2011

Spare parts for DRÄCO Profile Nibblers PN 4361 and PN 4360

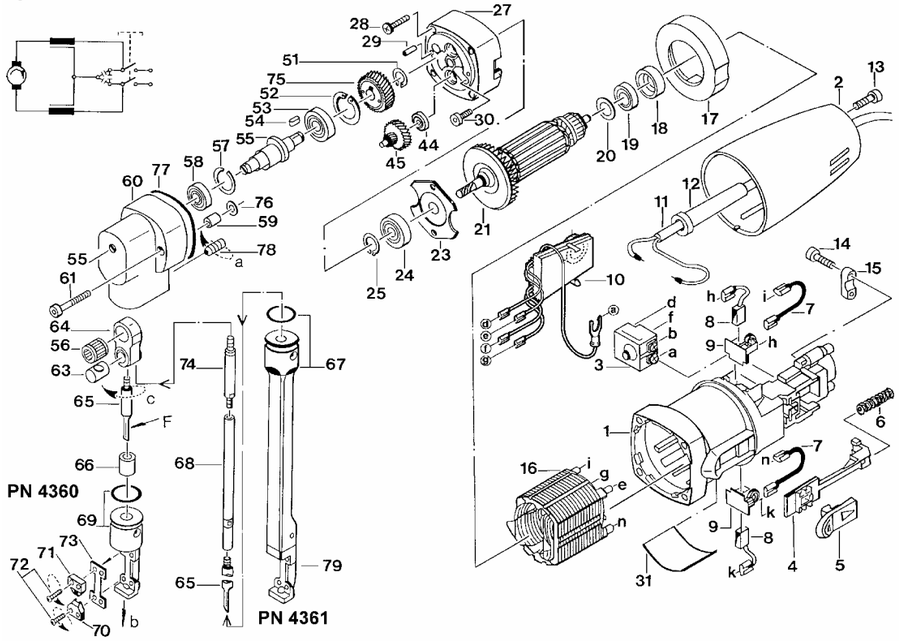

Spare Part List DRÄCO Profile Nibblers PN 4361 and PN 4360 Version 2002

Pos.	Order-No.	Description	Qty.	Pos.	Order-No.	Description	Qty.
1-30	32300	Motor 230V with electronic	1	44	13039	Ball Bearing	1
1-30	32400	Motor 115V with electronic	1	45	41092	Backgear	2
1	32040	Motorhousing	1	51	41001	Retaining Ring	1
2	32047	Housing Cap until 2001	1	52	41002	Retaining Ring	1
2	32058	Housing Cap since 2002	1	53	41003	Grooved ball bearing	1
3	32050	Switch	1	54	41004	Fitting key	1
4	32054	Guide Piece	1	55	41005	Eccentric Shaft	1
5	32056	Switch Pad	1	56	41006	Needle Cage	1
6	32055	Pressure Spring	1	57	41007	Spring Ring	1
7	32044	Wire	2	58	41008	Grooved Ball Bearing	1
8	32042	Carbon Brush Set (2 piece)	1	59	41009	Needle Bearing	1
9	32041	Carbon Brush Holder	2	60	41010	Housing	1
10	32045	Condensator	1	61	41011	Cheesehead Screw	2
10	32059	Electronic speed control	1	62	41012	Grease Nipple	1
11	32046	Cable with Plug Europe	1	63	41013	Connecting Rod Pin	1
12	32522	Connection Cable	1	64	41014	Connecting Rod	1
13	32048	Screw	2	65	41576	Punch	1
14	32053	Screw	2	66	41016	Liner	1
15	32052	Cable Collar	1	67	41167	Extension Holder	1
16	32039	Field 230 V	1	68	41168	Lower Extension of Punch	1
16	32139	Field 115V	1	69	41169	Holder for PN 4360	1
17	32038	Air Deflector Ring	1	70	41577	Die	1
18	32036	Rubber Sleeve	1	71	41171	Punch Guide	1
19	32030	Ball Bearing	1	72	41022	Raised Head Screw	4
20	32037	Washer	1	73	41579	Wearing Plate	1
21	32033	Armature 230V	1	74	41174	Upper Extension of Punch	1
21	32133	Armature 115V	1	75	41091	Eccentric Shaft Gear	1
23	32032	Bearing Cover	1	76	41095	Washer	1
24	10038	Ball Bearing	1	77	41107	Gasket	1
25	32034	Securing Ring	1	78	41039	Set Screw	1
27	32014	Bearing End Plate	1	79	41119	Support for PN 4361 / AK 3161	1
28	32010	Screw	4	65-79	41175	Tool Set cpl. for PN4361	1
29	32043	Pin	1		42861	Transport Box for PN 4361	
30	32012	Screw	2		18000	Transport Box for PN 4360+PN4320	
31	32057	Label	1				

Designated use

The DRÄCO Nibbler PN 4360 and PN 4361 are electrically operated hand machines:
For separating sheets such as trapezoidal sheet, corrugated sheet, boxed sheet, offset profiled strips For separating work pieces made of a punch able material such as steel, aluminium, non-ferrous heavy metal and plastic. For nibbling straight or curved exterior and interior cut-outs. For nibbling from scribed lines.
The nibbling process produces cutting edges free of deformations.

Before putting the machine into service

1. Safe operation of the appliance is only possible if you have completely read the operator's manual
2. Check the wear plate (73)
3. Check depth of immersion of the punch
4. The mains voltage must correspond to the information on the machine type plate.
5. Machines designated for 230 V can also be connected to 220 V power supplies.
6. Machines designated for 115 V can also be connected to 110 V power supplies.

Advice for operation

Check tools hourly for wear.
Never work with blunt tools!
Otherwise the machine may be overloaded.
Do not approach the work piece with the machine until the machine has been switched on and reached maximum speed.

Cooling and lubrication

The cutting result is improved and the service life of the punch increased if the cutting track is coated with oil before machining the work piece.
Recommended for steel: Punching and nibbling oil, order no. HW103387. Recommended for aluminium: Wisura oil, order no. HW125874

Changing the cutting direction

For right/left-hand operation or if a sectional sheet is to be machined, the tool and cutting direction can be turned to the right or left.

- Release the screw (78)
- Turn the tool (67 or 69) to the desired direction
- Turn on screw (78)

Interior cut-outs

Interior cut-outs require a start hole of at least 24 mm Ø.

Wear plate

The wear plate (73) protects the holder (79 or 69). Check wear plate regularly and replace if worn.

Care and Maintenance

Before working on machine disconnect from power supply by removing plug from socket.
Always keep the machine and the ventilation slots clean.
Oil the knife pin and knife at regular intervals.
If the machine should happen to fail despite the care taken in manufacture and testing, repair should be carried out by an authorised customer services agent for DRÄCO power tools

Environmental protection

Recycling raw materials instead of waste disposal
Machine, accessories and packaging should be sorted for environment-friendly recycling.
These instructions are printed on recycling paper manufactured without chlorine.

CE-Declaration of conformity

We declare under our sole responsibility that this product is in conformity with the following standards.
EC 98/37, EC 93/ 68 EWG, EC 04/108 EC, or standardisation documents DIN EN ISO 12100-1, DIN EN ISO 12100-2, EN 50 144, EN 55 014

CE 09 Max Draenert

Guarantee

Dräco tools carry a guarantee of 12 months from date of delivery. Damage attributable to normal wear and tear, overload or improper handling will be excluded from the guarantee. In case of complaint please send the machine, undismantled, to your dealer or the Dräco Service Centre for electric power tools.